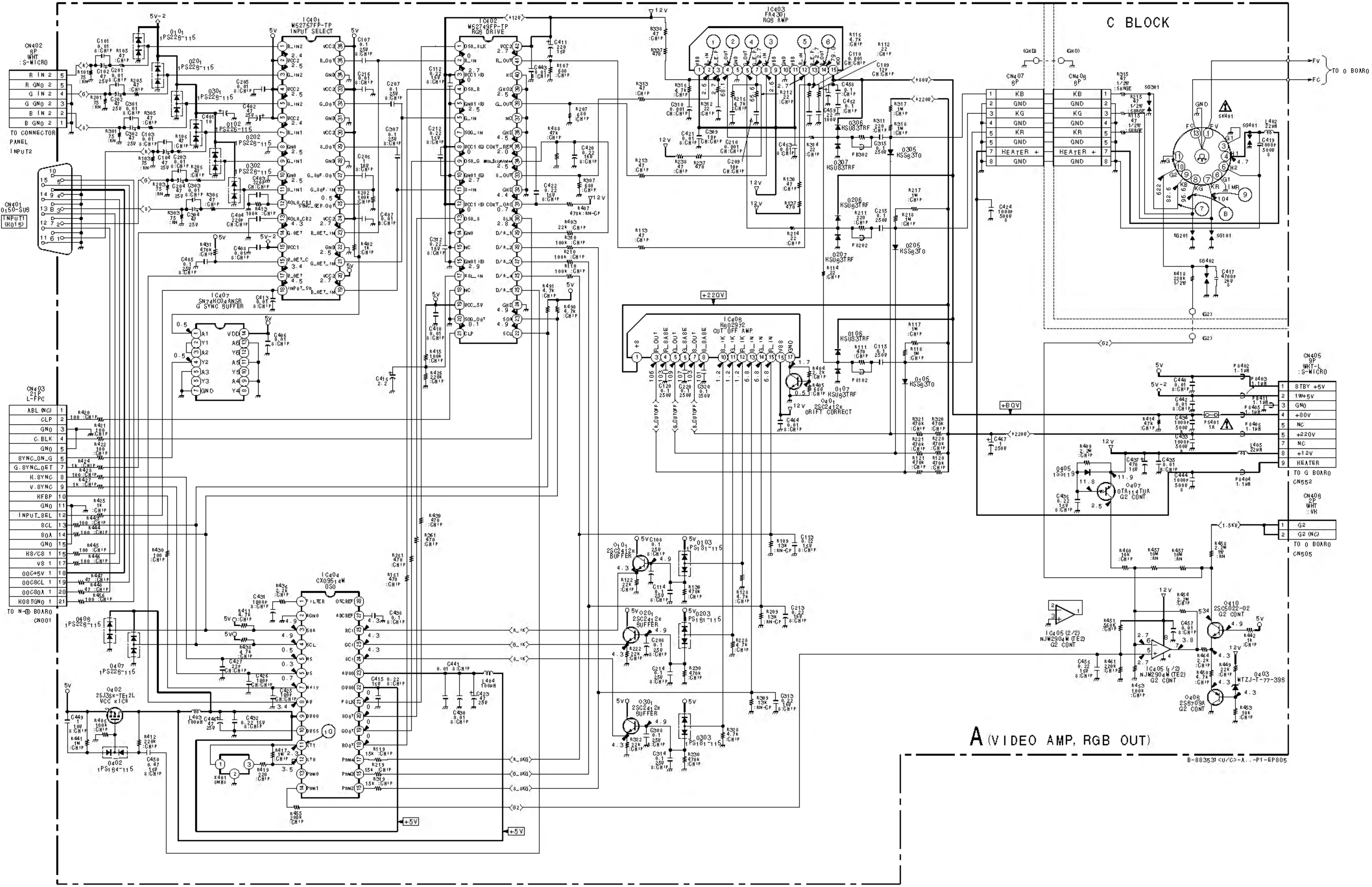
C BLOCK
A (VIDEO AMP, RGB OUT)
B-883531 <U/C>-A..-P1-EP805
IC401 M52757FP-TP INPUT SELECT
IC402 M52749FP-TP RGB DRIVE
IC403 FA430 RGB AMP
IC404 CXD9514M OSD
IC405 (2/2) NJM2904M (TE2) G2 CONT
IC405 (1/2) NJM2904M (TE2) G2 CONT
IC406 HA02972 CUT OFF AMP
IC407 SN74HC04ANSR G SYNC BUFFER
CN402 6P WHT :S-MICRO
R IN 2
R GND 2
G IN 2
G GND 2
B IN 2
B GND 2
TO CONNECTOR PANEL INPUT2
CN401 HD150-SUB INPUT1 (HD15)
CN403 21P L-FPC
ABL (NC)
CLP
GND
C.BLK
GND
SYNC_ON_G
G.SYNC_DET
H.SYNC
V.SYNC
HFBP
GND
INPUT_SEL
SCL
SDA
GND
HS/CS
VS
DDC+5V
DDCSCL
DDCSDA
HOSTGND
TO N-B BOARD CN001
CN407 8P
CN408 8P
KB
GND
KG
GND
KR
GND
HEATER +
GND
CN405 9P WHT-L :S-MICRO
STBY +5V
12V+5V
GND
+80V
NC
+220V
NC
+12V
HEATER
TO G BOARD CN552
CN406 2P WHT :VH
G2
G2 (NC)
TO D BOARD CN505
TO D BOARD
FV
FC
Q101 2SC2412K BUFFER
Q201 2SC2412K BUFFER
Q301 2SC2412K BUFFER
Q401 2SC2412K DRIFT CORRECT
Q402 2SJ356-TE12L VCC KICK
Q403 MTZJ-T-77-39B
Q405 1SS119
Q407 DTA114TUA G2 CONT
Q408 2SA709B G2 CONT
Q410 2SC5022-02 G2 CONT
X401 8MHz
+220V
+80V
+5V
12V
5V
5V-2
(1.5KV)

(6) Schematic Diagram of US Board

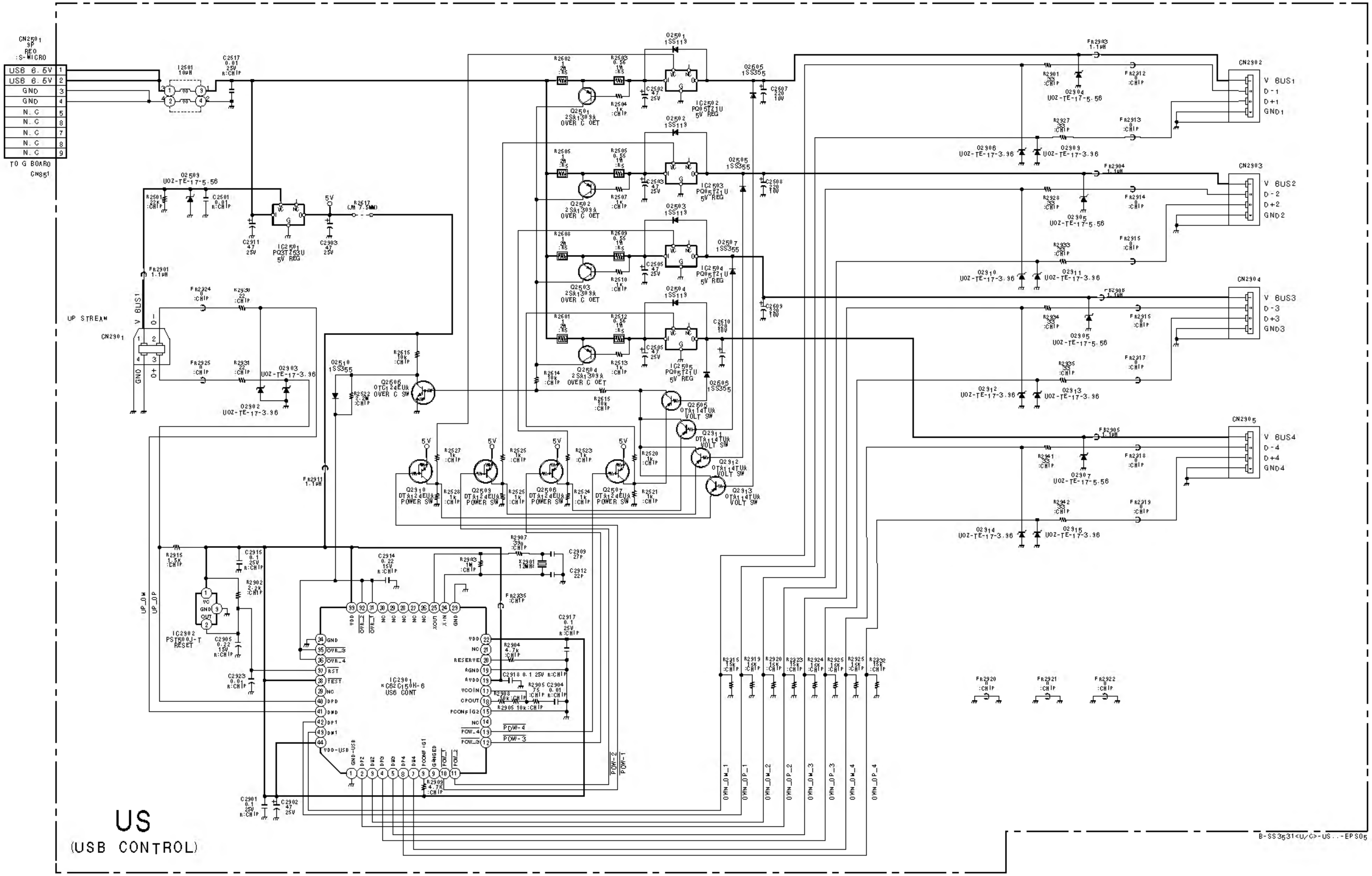
CN2501 9P REO :S-MICRO
USB 6.5V
USB 6.5V
GND
GND
N.C
TO G BOARD CN851
I2501 10uH
C2517 0.01 25V B:CHIP
IC2501 PQ3TZ53U 5V REG
D2509 UDZ-TE-17-5.56
C2911 47 25V
C2903 47 25V
5V
FR2901 1.1uH
UP STREAM
CN2901
V BUS1
D-
D+
GND
D2903 UDZ-TE-17-3.96
D2902 UDZ-TE-17-3.96
D2510 1SS355
Q2606 DTC124EUA OVER C SW
D2501 1SS113
D2502 1SS113
D2503 1SS113
D2504 1SS113
IC2502 PQ05TZ1U 5V REG
IC2503 PQ05TZ1U 5V REG
IC2504 PQ05TZ1U 5V REG
IC2505 PQ05TZ1U 5V REG
Q2501 2SA1309A OVER C DET
Q2502 2SA1309A OVER C DET
Q2503 2SA1309A OVER C DET
Q2504 2SA1309A OVER C DET
D2605 1SS355
D2505 1SS355
D2507 1SS355
Q2605 DTA114TUA VOLT SW
Q2311 DTA114TUA VOLT SW
Q2312 DTA114TUA VOLT SW
Q2313 DTA114TUA VOLT SW
Q2510 DTA124EUA POWER SW
Q2509 DTA124EUA POWER SW
Q2506 DTA124EUA POWER SW
Q2507 DTA124EUA POWER SW
IC2902 PST600J-T RESET
IC2901 KG2C150H-6 USB CONT
X2901 12MHz
CN2902
V BUS1
D-1
D+1
GND1
CN2903
V BUS2
D-2
D+2
GND2
CN2904
V BUS3
D-3
D+3
GND3
CN2905
V BUS4
D-4
D+4
GND4
D2904 UDZ-TE-17-5.56
D2905 UDZ-TE-17-5.56
D2906 UDZ-TE-17-3.96
D2907 UDZ-TE-17-5.56
POW-4
POW-3
POW-2
POW-1
OVR_DM_1
OVR_DP_1
OVR_DM_2
OVR_DP_2
OVR_DM_3
OVR_DP_3
OVR_DM_4
OVR_DP_4
UP_DM
UP_DP
US
(USB CONTROL)
B-SS3531<U/C>-US..-EPS05

(4) Schematic Diagrams of N (ⓐ, ⓑ, ⓒ) Board

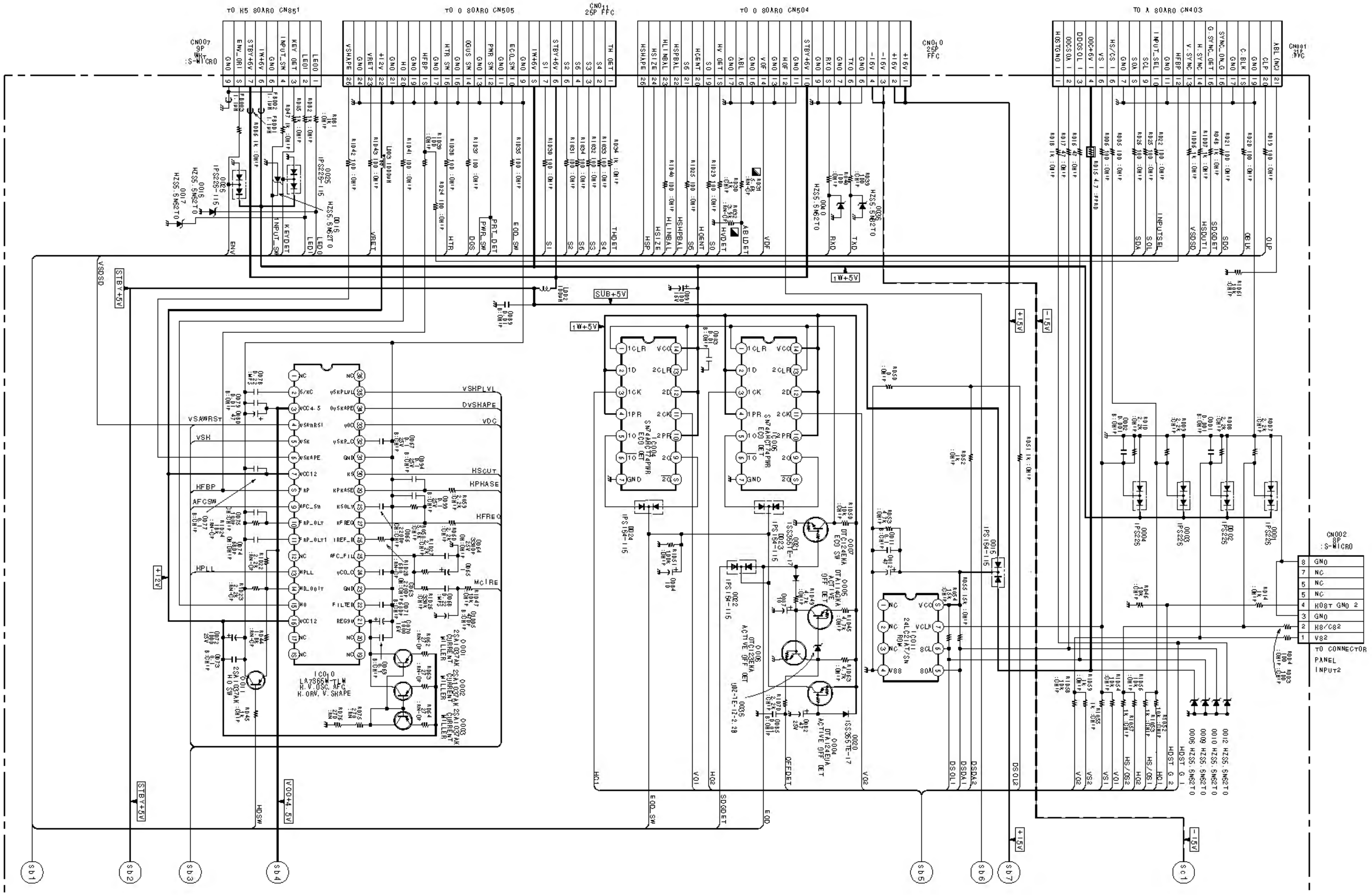
TO HS BOARD CN851
TO D BOARD CN505
TO D BOARD CN504
TO A BOARD CN403
CN007 9P WHT :S-MICRO
CN011 26P FFC
CN010 25P FFC
CN001 21P FFC
CN002 8P :S-MICRO
GND
NC
HOST GND 2
HS/CS2
VS2
TO CONNECTOR PANEL INPUT2
IC010 LA7866N-TLM H.V.OSC, AFC H.DRV, V.SHAPE
IC004 SN74AHC74PWR EQO DET
IC005 SN74AHC74PWR EQO DET
IC011 24LC02B-I/SN ROM
STBY+5V
SUB+5V
IW+5V
+12V
VCC+4.5V
+15V
-15V
VSHPLVL
DVSHAPE
VDC
VSAWRST
VSH
HFBP
AFCSW
HPLL
HSCUT
HPHASE
HFREQ
MCIRE
HDSW
EOD_SW
SDGDET
EOD
HO1
VO1
HO2
VO2
OFFDET
DSDA1
DSOL1
DSDA2
DSOL2
VS1
HS/DS1
HDST G 2
HDST G 1
sb1
sb2
sb3
sb4
sb5
sb6
sb7
sc1

N -ⓐ
(H. OSC, V. OSC, AFC, H. DRV, V. SHAPE)

N-ⓑ
(μ-COM, GEO MAGNETIC SENSOR)

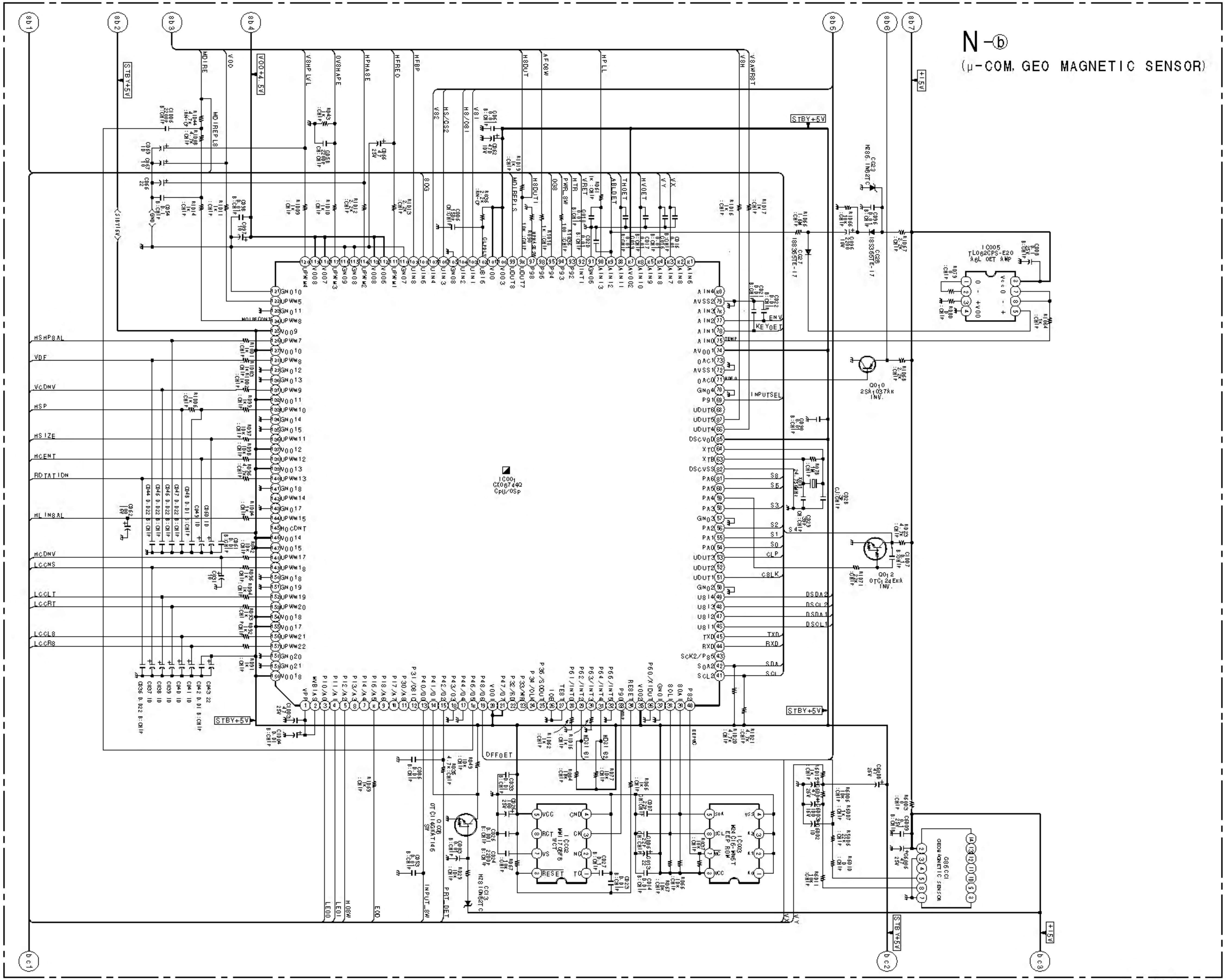

8b1
8b2
8b3
8b4
8b5
8b6
8b7
bc1
bc2
bc3
STBY+5V
VDD+4.5V
+15V
MDIRE
VDD
V8HPLVL
DV8HAPE
HPHASE
HFREQ
HFBP
H8OUT
AF08W
HPLL
V8H
V8AWFBST
VSC
HS/CS2
H8/C81
MDIREPLS
IC001
CXD6744Q
CPU/OSP
IC005
TL062CPS-E20
A&L DET AMP
Q010
2SA1037AK
INV.
Q012
DTC124EKA
INV.
Q008
DTC114GKA-T146
SW
IC003
M51953
IC002
M24C16-MN6T
EEP ROM
GS001
GEOMAGNETIC SENSOR
HSHPSAL
VDF
VCDNV
HSP
HSIZE
HCENT
ROTATION
HLINSAL
HCDNV
LCCNS
LCCLT
LCCRT
LCCL8
LCCR8
ENV
KEYDET
INPUTSEL
S0
S1
S2
S3
S6
S8
CLP
CBLK
DSDA2
DSCL2
DSDA1
DSCL1
TXD
RXD
SDA
SCL
OFFDET
LED0
LED1
H08W
EOD
INPUT_SW
PRT_DET
VCC
GND
RESET
EEPWD
VX
VY

R-99353B <u/C>-N -B2-FR906

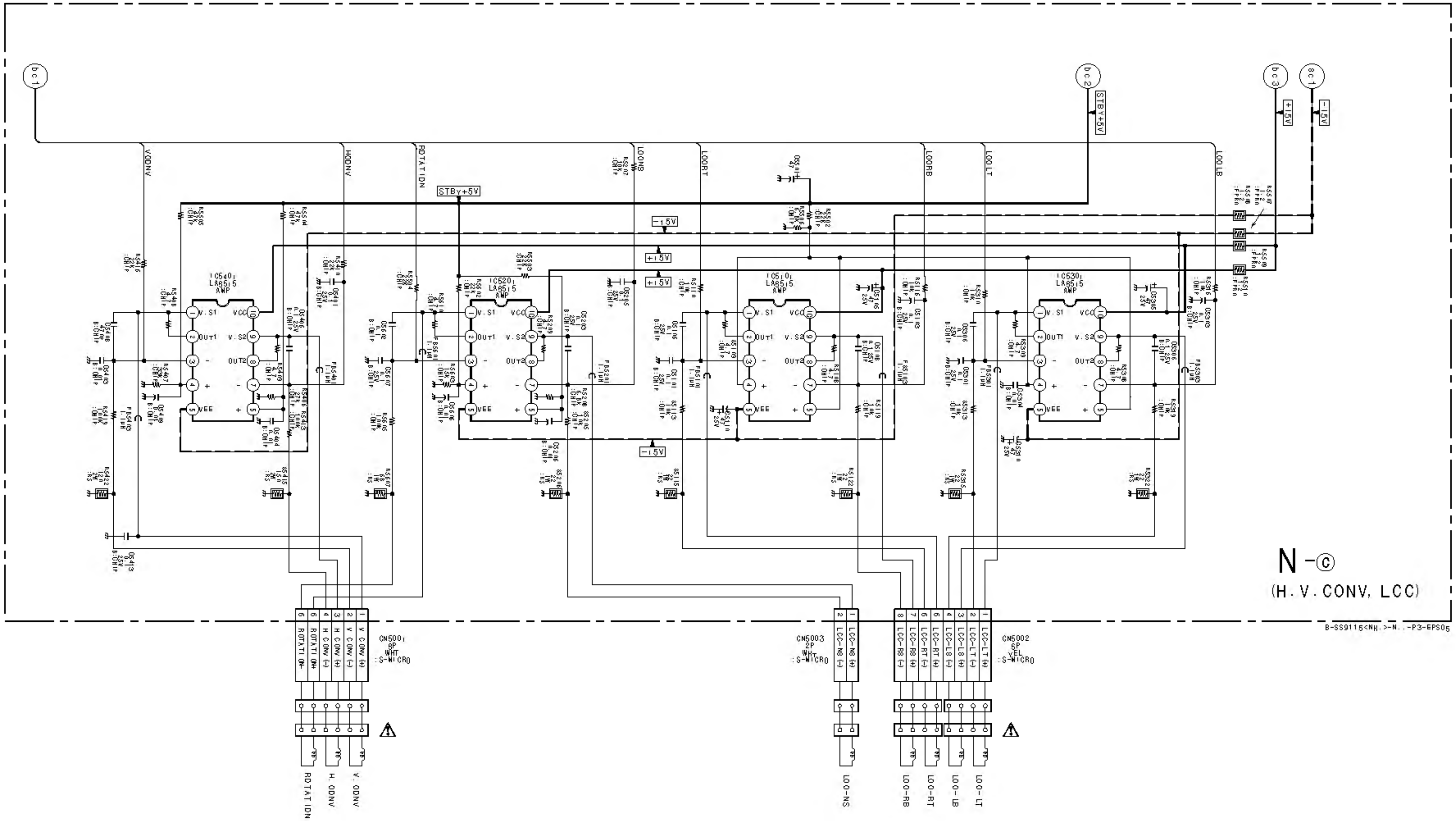
bc1
bc2
bc3
8c1
STBY+5V
+15V
-15V
VCONV
HCONV
ROTATION
LCONS
LCCRT
LCCRB
LCCLT
LCCLB
IC5401 LA8515 AMP
IC5201 LA8515 AMP
IC5101 LA8515 AMP
IC5301 LA8515 AMP
V.S1
VCC
OUT1
V.S2
OUT2
VEE
CN5001 8P WHT :S-MICRO
V.CONV(+)
V.CONV(-)
H.CONV(+)
H.CONV(-)
ROTATION+
ROTATION-
CN5003 2P WHT :S-MICRO
LCC-NS(+)
LCC-NS(-)
CN5002 8P YEL :S-MICRO
LCC-LT(+)
LCC-LT(-)
LCC-LB(+)
LCC-LB(-)
LCC-RT(+)
LCC-RT(-)
LCC-RB(+)
LCC-RB(-)
ROTATION
H.CONV
V.CONV
LCC-NS
LCC-RB
LCC-RT
LCC-LB
LCC-LT

N-ⓒ

(H.V.CONV, LCC)

B-SS9115<NH.>-N..-P3-EPS05

(5) Schematic Diagram of G Board

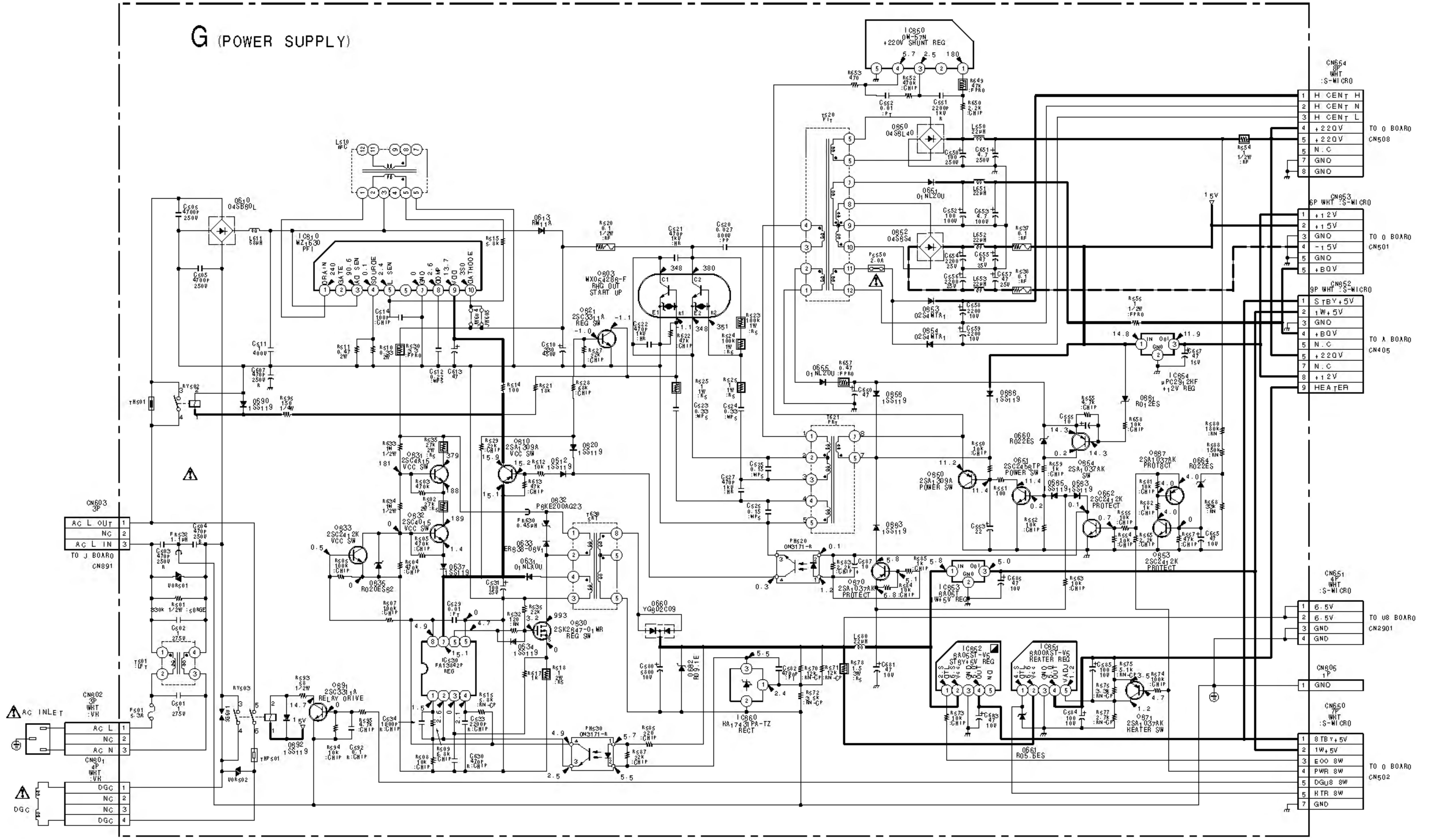
G (POWER SUPPLY)
IC650 OM-57N +220V SHUNT REG
IC610 WZ1630 PFI
DRAIN GATE VAO SEN SOURCE L SEN GND COMP VD 3S0 CATHODE
L610 PFC
D610 04SB80L
D613 RM11A
Q603 WX0C4288-F RHG OUT START UP
Q621 2SC3311A REG SW
T620 FIT
T621 PIT
D650 04S8L40
D651 01NL20U
D652 04SBS4
D653 02G4NTA1
D654 02G4NTA1
D655 01NL20U
D656 1SS119
D663 1SS119
D688 1SS119
D690 1SS119
Q610 2SA1309A VCC SW
Q631 2SC4615 VCC SW
Q632 2SC4015 VCC SW
Q633 2SC2412K VCC SW
D635 RD20ES82
D637 1SS119
D632 P6KE200AG23
T630 SRT
D633 ERB38-08V1
D631 01NL80U
D620 1SS119
D612 1SS119
IC630 FA13842P REG
Q630 2SK2847-01MR REG SW
D634 1SS119
PH630 ON3171-R
PH620 ON3171-R
Q670 2SA1037AK PROTECT
IC653 8A05T 1W+5V REG
D660 YG802C09
D662 RD9.1E
IC660 HA17431PA-TZ RECT
IC652 8A05ST-V6 STBY+5V REG
IC651 8A00AST-V5 HEATER REG
Q671 2SA1037AK HEATER SW
D661 RD5.6ES
Q650 2SA1309A POWER SW
Q651 2SC2458TP POWER SW
Q652 2SC2412K PROTECT
Q653 2SC2412K PROTECT
Q654 2SA1037AK SW
Q687 2SA1037AK PROTECT
D660 RD22ES
D664 RD22ES
D681 RD12ES
IC654 μPC2912HF +12V REG
Q691 2SC3311A RELAY DRIVE
D692 1SS119
RY601
RY602
RY603
THS01
THP601
VDR601
VDR602
T601 LFT
F601 5.3A
CN603 3P
1 AC L OUT
2 NC
3 AC L IN
TO J BOARD CN891
AC INLET
CN602 3P WHT :VH
1 AC L
2 NC
3 AC N
CN801 4P WHT :VH
1 DGC
2 NC
3 NC
4 DGC
DGC
CN654 8P WHT :S-MICRO
1 H CENT H
2 H CENT N
3 H CENT L
4 +220V
5 +220V
6 N.C
7 GND
8 GND
TO D BOARD CN508
CN653 6P WHT :S-MICRO
1 +12V
2 +15V
3 GND
4 -15V
5 GND
6 +BOV
TO D BOARD CN501
CN652 9P WHT :S-MICRO
1 STBY+5V
2 1W+5V
3 GND
4 +BOV
5 N.C
6 +220V
7 N.C
8 +12V
9 HEATER
TO A BOARD CN405
CN651 4P WHT :S-MICRO
1 6.5V
2 6.5V
3 GND
4 GND
TO U8 BOARD CN2901
CN605 1P
1 GND
CN650 7P WHT :S-MICRO
1 STBY+5V
2 1W+5V
3 EOO SW
4 PWR SW
5 DGUS SW
6 HTR SW
7 GND
TO D BOARD CN502

(3) Schematic Diagram of D Board

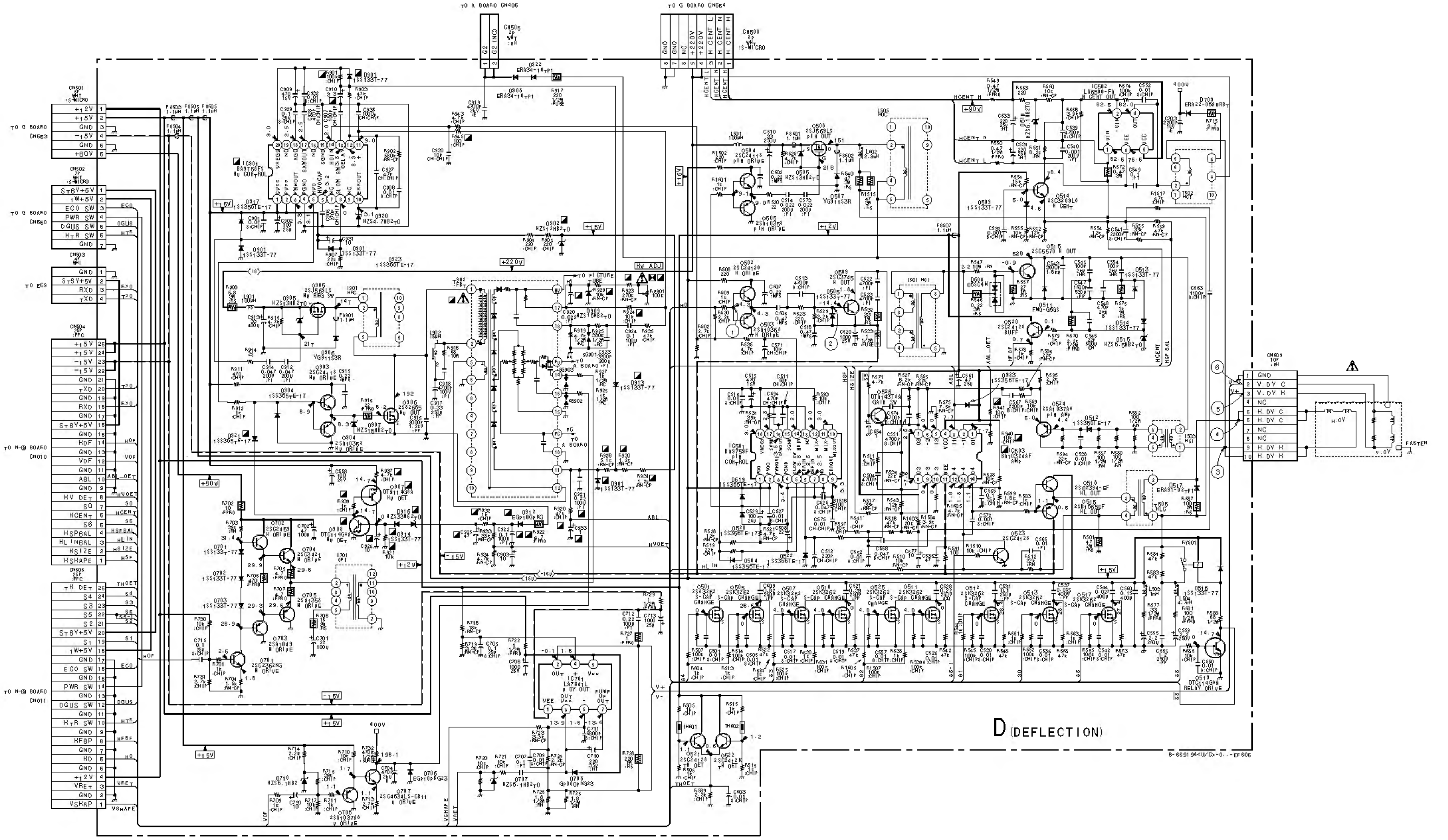
TO A BOARD CN406
CN505
TO G BOARD CN564
CN508
CN501
TO G BOARD CN563
+12V
+15V
GND
-15V
GND
+80V
CN502
TO G BOARD CN560
STBY+5V
1W+5V
ECO SW
PWR SW
DGUS SW
HTR SW
GND
CN503
TO ECS
GND
STBY+5V
RXD
TXD
CN504
TO N-B BOARD CN010
CN505
TO N-B BOARD CN011
IC901
BA3754FS
Hv CONTROL
IC581
BA3753F
PIN CONTROL
IC582
LA6500-FA
H CENT OUT
IC701
LA7841L
V OUT
CN609
GND
V.DY C
V.DY H
NC
H.DY C
H.DY H
TO PICTURE TUBE
HV ADJ
TO A BOARD
FASTEN
H-DY
V-DY
D (DEFLECTION)
B-SS9194<U/C>-0..-EFS06